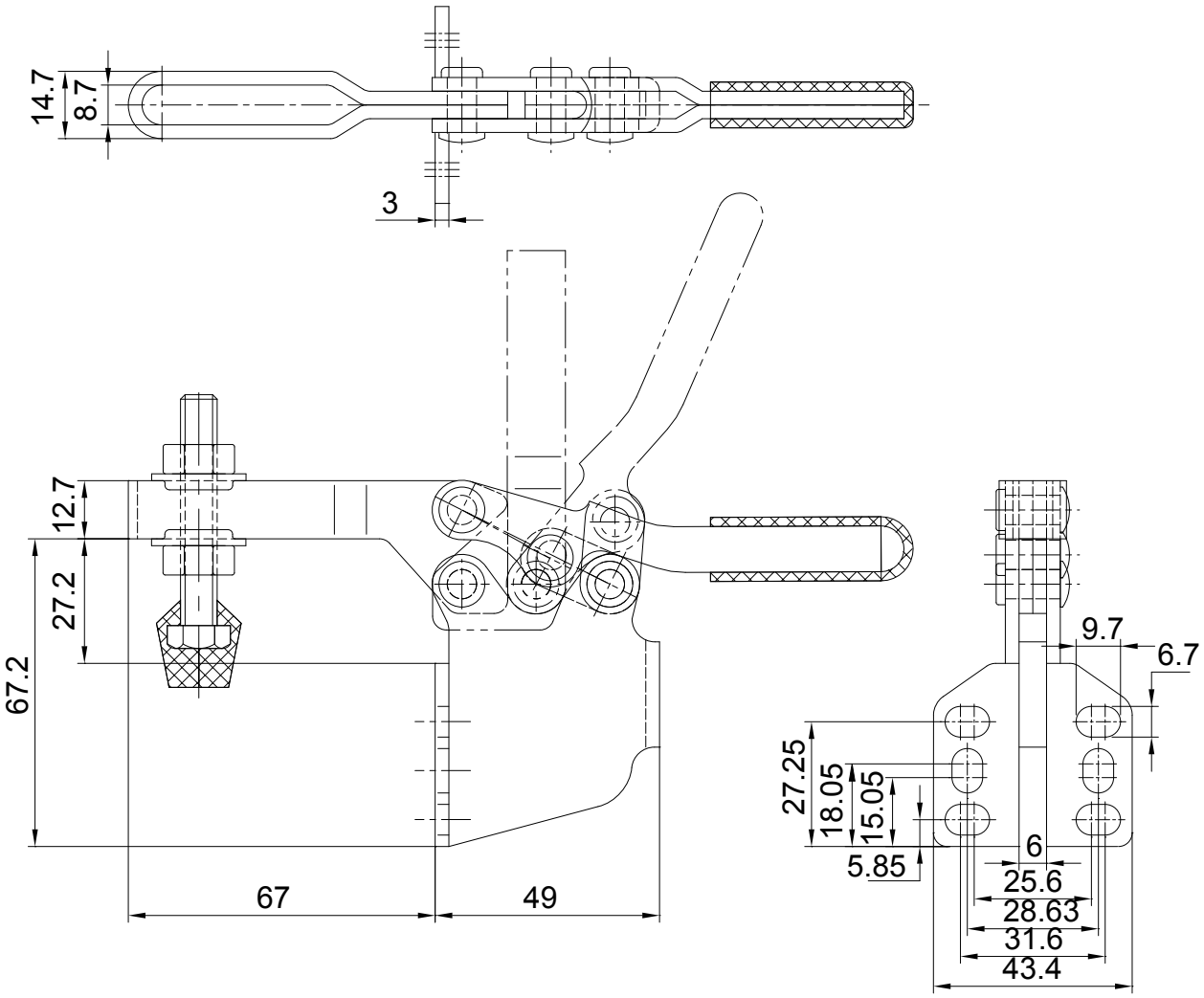

BAR OPENS:90°

HANDLE OPENS:66°

1		1			Quality
Prt.	Dimensions	Qty.	Weight	Material	Size-Norm Remarks

VAN OMMEN

TOOLS FOR METAL CUTTING

Van Ommen B.V.
Voorste Kerkweg 4
7361 ET Beekbergen
Tel.:0031-55 506 7600
Fax.: 0031 55 5067601

Unless otherwise specified:

Measurements are in mm.

General tolerance according to NEN-ISO 2768-1 m.

Geometrical tollerance according to NEN-ISO 2768-2 K.

* Deburr & break all sharp edges
*Casting tolerance acc. EN 1563
*= if appilcable.

Revision:

AMERICAN PROJECTION:

PRODUCT NUMBER:
88.914.0300

PRODUCT NAAM:
Horizontal handle toggle clamp

A4